THERMA-TRU DOORS

L. F. SCHMIDT LICENSE No. 43409 STATE OF FLORIDA PROFESSIONAL ENGINEER

Digitally signed by Lyndon F Schmidt
Date: 2026.08.10 11:11:13 -04'00'

This item has been digitally signed and sealed by **L. F. Schmidt, P.E.** on the date adjacent to the seal.

Printed copies of this document are not considered signed and sealed and the signature must be verified on any electronic copies.

THIS PRODUCT APPROVAL IS VALID ONLY FOR THE STATE OF FLORIDA

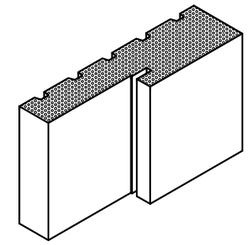

# "COMPOSITE JAMB"

## OUTSWING "IMPACT"

GENERAL NOTES

1. This product anchoring drawing has been evaluated and is in compliance with the 9th Edition (2026) Florida Building Code (FBC) structural requirements excluding the "High Velocity Hurricane Zone" (HVHZ). See the Certification Agency Certificate for sizes, specifications & ratings.
2. Product anchors shall be as listed and spaced as shown on details. Anchor embedment to base material shall be beyond wall dressing or stucco.
3. When used in areas requiring wind borne debris protection this product complies with FBC Sections 1609.1.2 & R301.2.1.2 and does not require an impact resistant covering. This product meets missile level "D" and includes Wind Zone 3 as defined in ASTM E1996.
4. This "IMPACT" door jamb, as a component, is to be used as a substitute to a similar door jamb in an "Impact" approved (complies with FBC Sections 1609.1.2 & R301.2.1.2) door system possessing a current Florida Statewide Product Approval. In addition, the door jamb may also be used as a substitute for an approved Therma-Tru outswing sidelite sill.
5. The design pressure rating of the assembly shall be the lesser of the design pressure for the door jamb shown in this approval or the design pressure of the "Impact" door assembly used in conjunction with this approval.
6. The maximum frame size of the door assembly shall be lesser of the maximum frame size stated in this approval or the maximum frame size of the "Impact" door assembly approval used in conjunction with this approval.
7. This product is approved for use with "Impact" opaque fiberglass side hinged swing doors and sidelites only.

TABLE OF CONTENTS


| SHEET # | DESCRIPTION |
|---|---|
| 1 | Typical elevations, design pressures & general notes |
| 2 | Elevations |
| 3 | Horizontal cross sections |
| 4 | Vertical cross sections |
| 5 | Buck anchoring |
| 6 | Frame anchoring |
| 7 | Bill of materials & components |


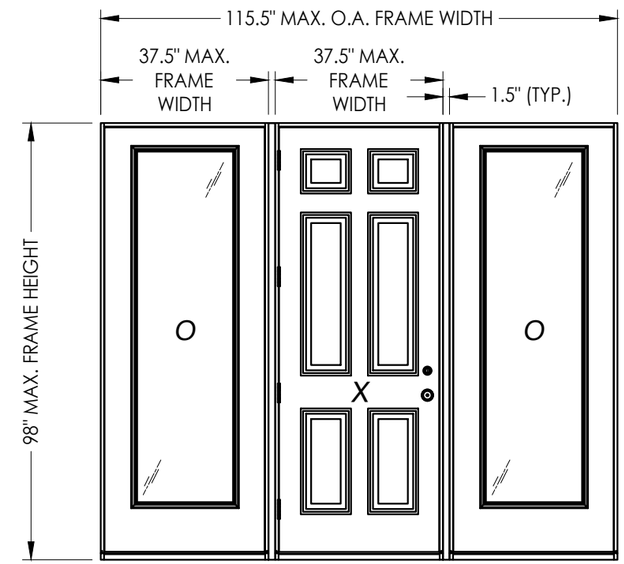


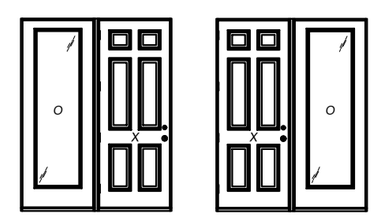


| CONFIGURATION | MAX. FRAME DIMENSION | DESIGN PRESSURE (PSF) OUTSWING | |
|---|---|---|---|
| | | POSITIVE | NEGATIVE |
| OX, XO, OXO | 115.5" x 98.0" | +50.0 | -50.0 |


Documents Prepared By:
Lyndon F. Schmidt
P.E. No. 43409
RW BUILDING CONSULTANTS, INC.
P.O. Box 230, Valrico, FL 33595
Phone No.: 813.659.9197
FBPE Registry No. 9813


PRODUCT: THERMA-TRU COMPONENTS

PART OR ASSEMBLY: TYPICAL ELEVATION, DESIGN PRESSURES & GENERAL NOTES

REVISIONS

| NO. | DATE | | BY |
|---|---|---|---|
| 1 | 7/03/26 | UPDATE TO 9TH ED. (2026) FBC | LFS |

DATE: 2/10/25
SCALE: N.T.S.
DWG. BY: LFS
CHK. BY: RW
DRAWING NO.: FL-47296.2
SHEET 1 OF 7

© 2025 R.W. BUILDING CONSULTANTS INC.

Z:\2023 FBC Drawings\Therma-Tru\FL-47296 R1\FL-47296.2.dwg

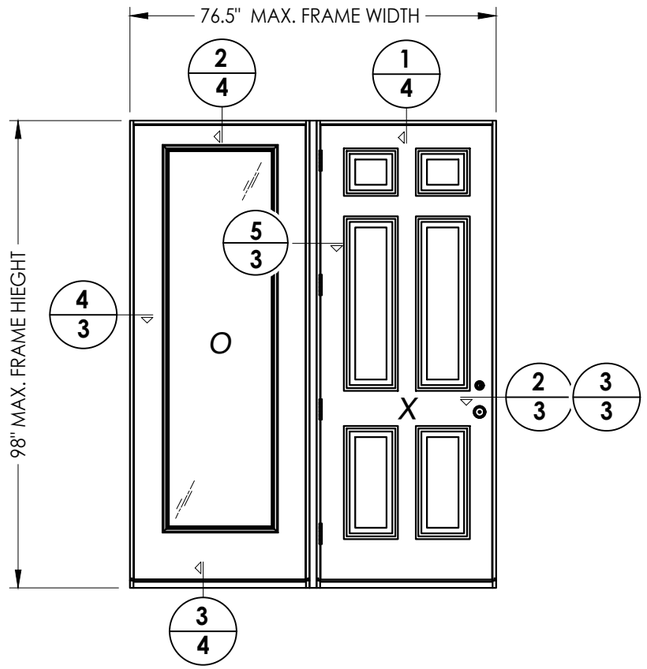


SINGLE DOOR (CENTER-HINGED) w/ SIDELITE

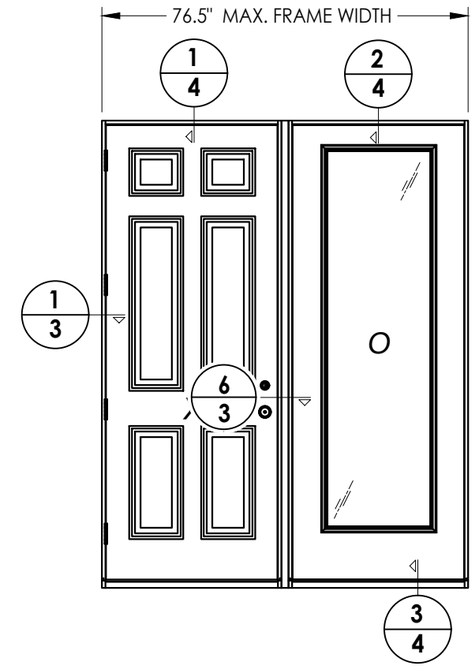


SINGLE DOOR w/ SIDELITE

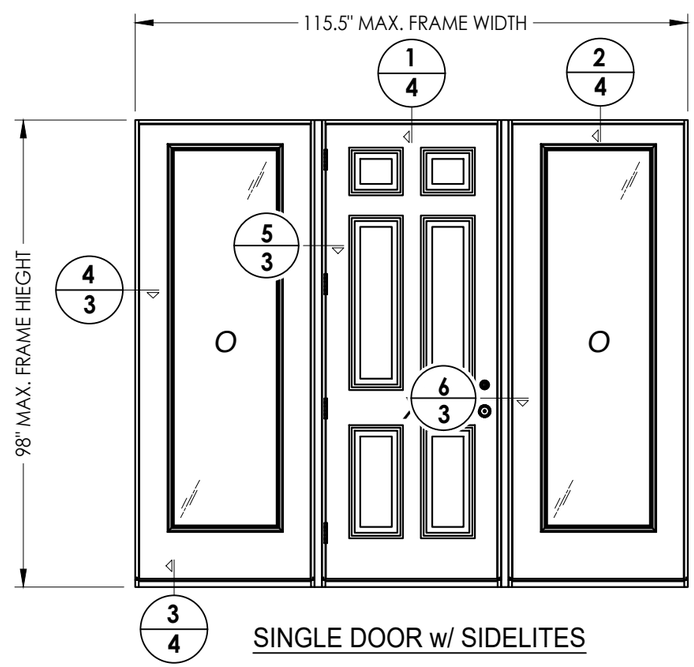


SINGLE DOOR w/ SIDELITES

Documents Prepared By:
Lyndon F. Schmidt
P.E. No. 43409

RW BUILDING CONSULTANTS, INC.
P.O. Box 230, Valrico, FL 33595
Phone No.: 813.659.9197
FBPE Registry No. 9813

PRODUCT: THERMA-TRU COMPONENTS

PART OR ASSEMBLY: ELEVATIONS

| NO. | DATE | REVISIONS | BY |
|---|---|---|---|
| 1 | 7/03/26 | UPDATE TO 9TH ED. (2026) FBC | LFS |

DATE: 2/10/25
SCALE: N.T.S.
DWG. BY: LFS
CHK. BY: RW
DRAWING NO.: FL-47296.2
SHEET 2 OF 7

© 2025 R.W. Building Consultants Inc.

Z:\2023 FBC Drawings\Therma-Tru\FL-47296 R1\FL-47296.2.dwg

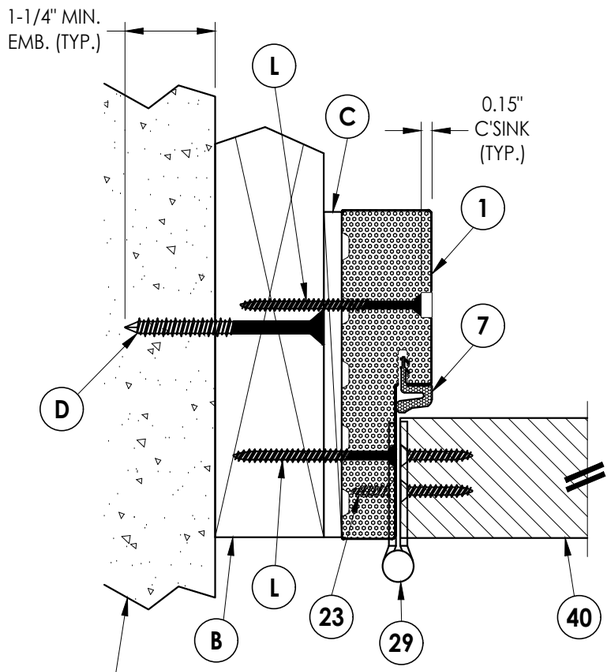


**1/3 HORIZONTAL CROSS SECTION**
2X Buck Construction

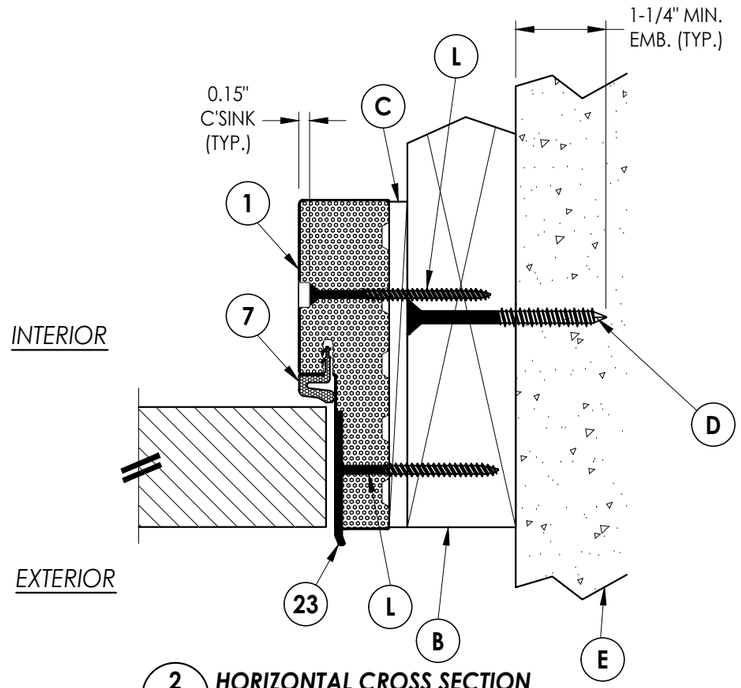


**2/3 HORIZONTAL CROSS SECTION**
2X Buck Construction

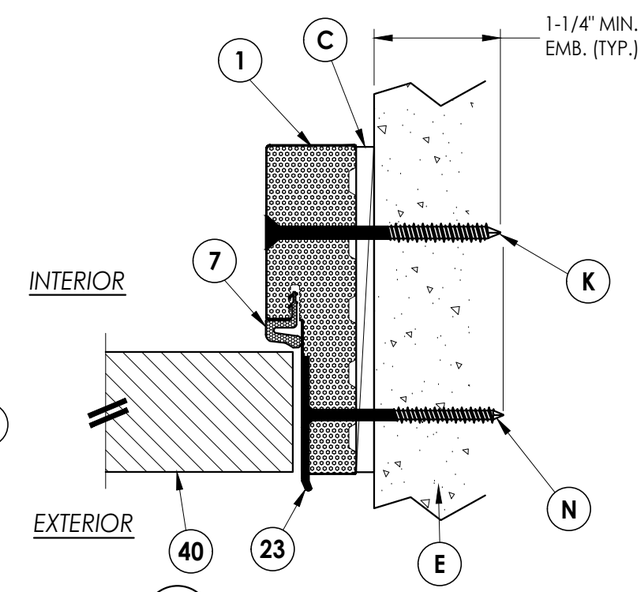


**3/3 HORIZONTAL CROSS SECTION**
Shown Direct to masonry

NOTE:
SEE SEPARATE SIDE-HINGED DOOR PRODUCT APPROVAL FOR DOOR CONSTRUCTION DETAILS NOT SHOWN, INCLUDING LOCK HARDWARE, ASTRAGAL, HINGE AND THRESHOLD CONNECTIONS.

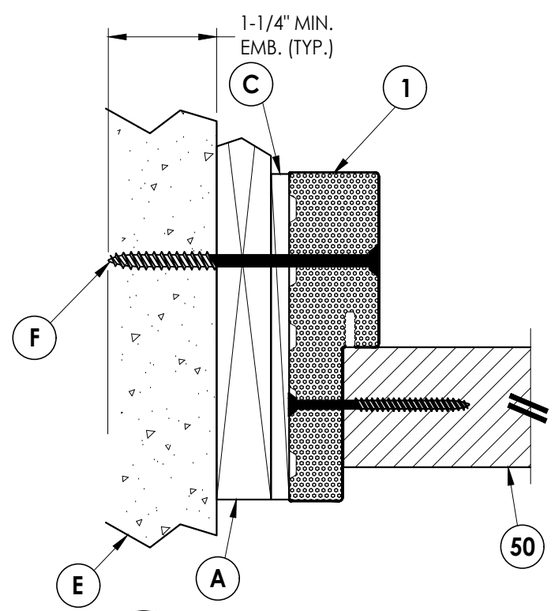


**4/3 HORIZONTAL CROSS SECTION**
Shown w/1X sub-buck

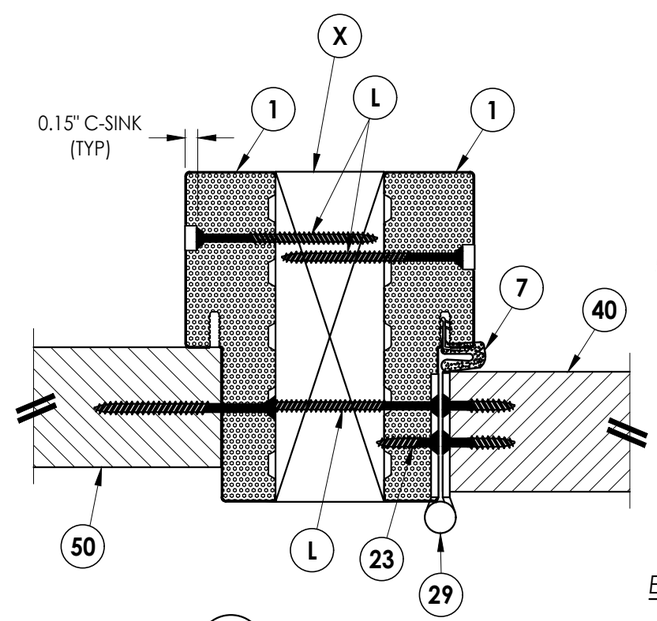


**5/3 HORIZONTAL CROSS SECTION**

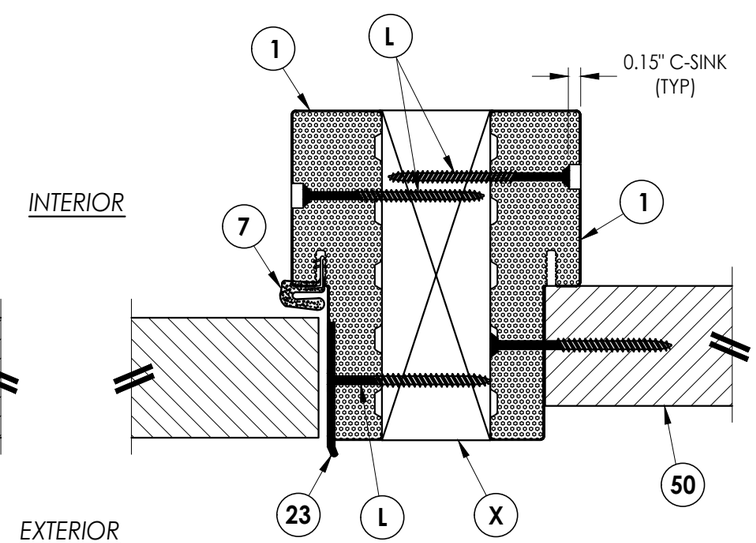


**6/3 HORIZONTAL CROSS SECTION**

Documents Prepared By:
Lyndon F. Schmidt
P.E. No. 43409

RW BUILDING CONSULTANTS, INC.
P.O. Box 230, Valrico, FL 33595
Phone No.: 813.659.9197
FBPE Registry No. 9813

PRODUCT: THERMA–TRU COMPONENTS

PART OR ASSEMBLY: HORIZONTAL CROSS SECTIONS

| NO. | DATE | BY |
|---|---|---|
| 1 | 7/03/26 | LFS |

REVISIONS: UPDATE TO 9TH ED. (2026) FBC

DATE: 2/10/25
SCALE: N.T.S.
DWG. BY: LFS
CHK. BY: RW
DRAWING NO.: FL–47296.2
SHEET 3 OF 7

© 2025 R.W. BUILDING CONSULTANTS INC.

Z:\2023 FBC Drawings\Therma-Tru\FL-47296 R1\FL-47296.2.dwg

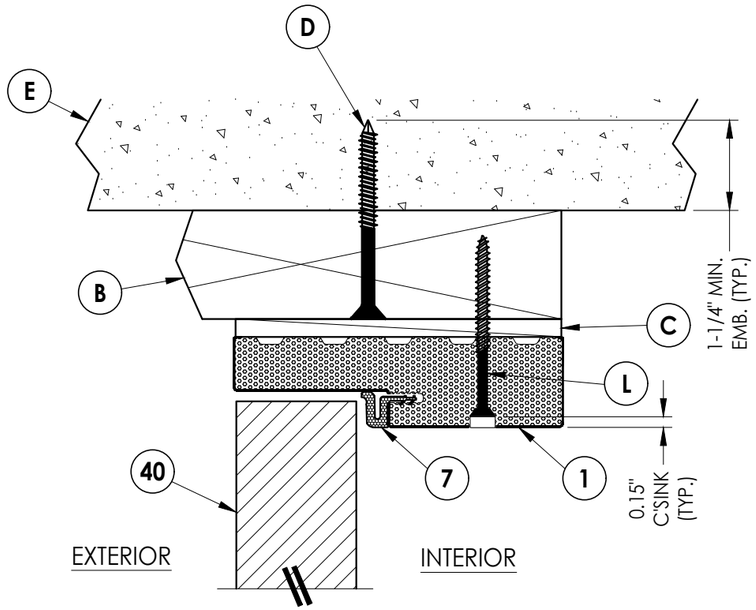


**1/4 VERTICAL CROSS SECTION**
2X Buck Construction - Single door

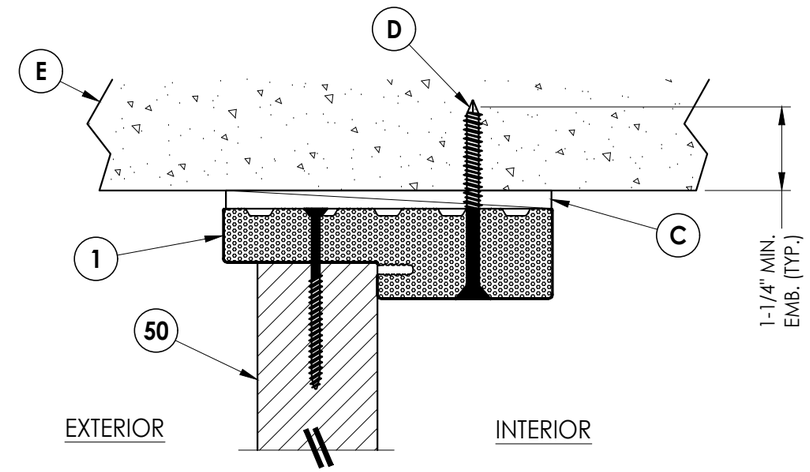


**2/4 VERTICAL CROSS SECTION**
Shown Direct to Masonry

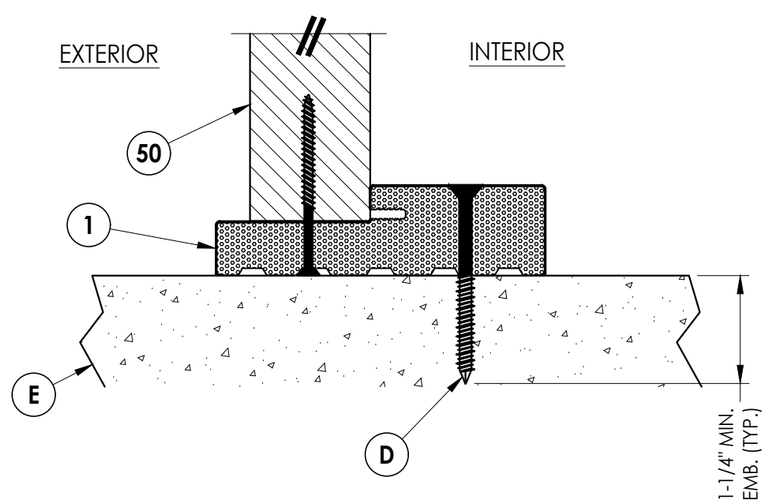


**3/4 VERTICAL CROSS SECTION**
Shown Direct to Masonry
Outswing Sill Only

NOTE:
SEE SEPARATE SIDE-HINGED DOOR PRODUCT APPROVAL FOR DOOR CONSTRUCTION DETAILS NOT SHOWN, INCLUDING LOCK HARDWARE, ASTRAGAL, HINGE AND THRESHOLD CONNECTIONS.


Documents Prepared By:
Lyndon F. Schmidt
P.E. No. 43409
RW BUILDING CONSULTANTS, INC.
P.O. Box 230, Valrico, FL 33595
Phone No.: 813.659.9197
FBPE Registry No. 9813


PRODUCT: THERMA-TRU COMPONENTS

PART OR ASSEMBLY: VERTICAL CROSS SECTIONS

| NO. | DATE | REVISIONS | BY |
|---|---|---|---|
| 1 | 7/03/26 | UPDATE TO 9TH ED. (2026) FBC | LFS |

DATE: 2/10/25
SCALE: N.T.S.
DWG. BY: LFS
CHK. BY: RW
DRAWING NO.: FL-47296.2
SHEET 4 OF 7

© 2025 R.W. Building Consultants Inc.

Z:\2023 FBC Drawings\Therma-Tru\FL-47296 R1\FL-47296.2.dwg

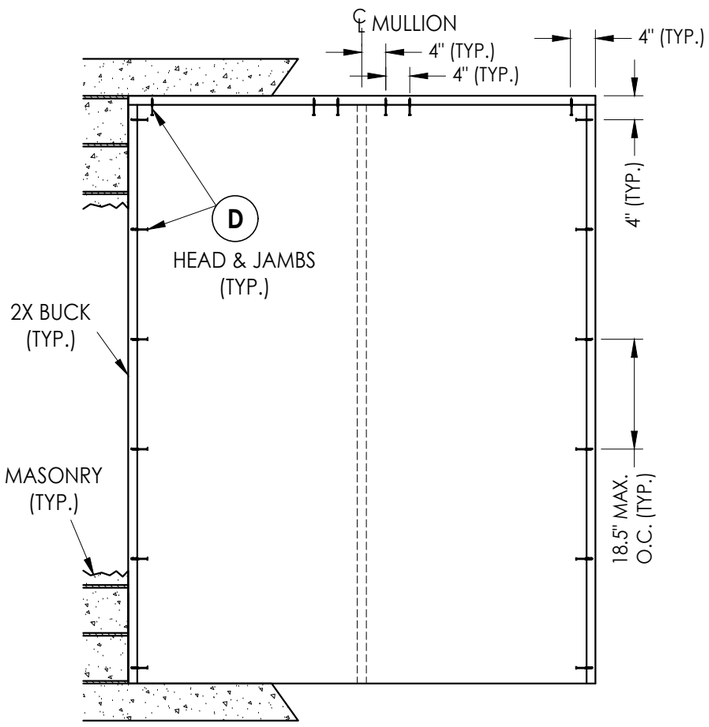


XO/OX

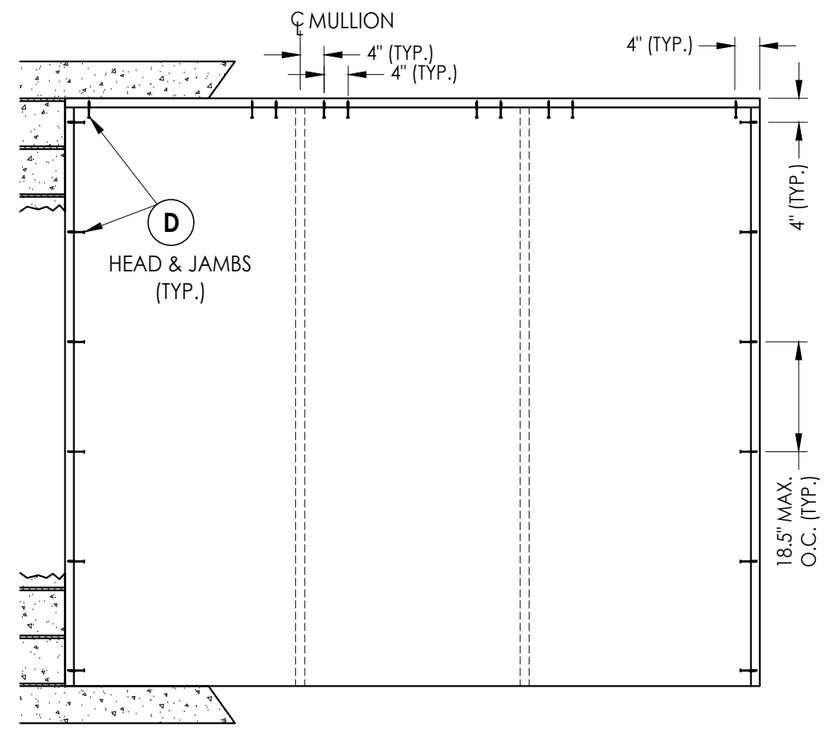


OXO

Documents Prepared By:
Lyndon F. Schmidt
P.E. No. 43409
RW BUILDING CONSULTANTS, INC.
P.O. Box 230, Valrico, FL 33595
Phone No.: 813.659.9197
FBPE Registry No. 9813

PRODUCT: THERMA–TRU COMPONENTS

PART OR ASSEMBLY: BUCK ANCHORING

REVISIONS

| NO. | DATE | | BY |
|---|---|---|---|
| 1 | 7/03/26 | UPDATE TO 9TH ED. (2026) FBC | LFS |

DATE: 2/10/25
SCALE: N.T.S.
DWG. BY: LFS
CHK. BY: RW
DRAWING NO.: FL–47296.2
SHEET 5 OF 7

© 2025 R.W. BUILDING CONSULTANTS INC.

Z:\2023 FBC Drawings\Therma-Tru\FL-47296 R1\FL-47296.2.dwg

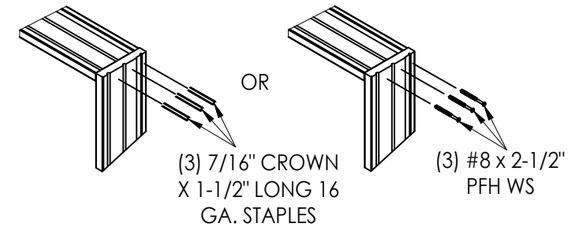


**JAMB TO HEAD/SILL DETAIL**
(TYP.)

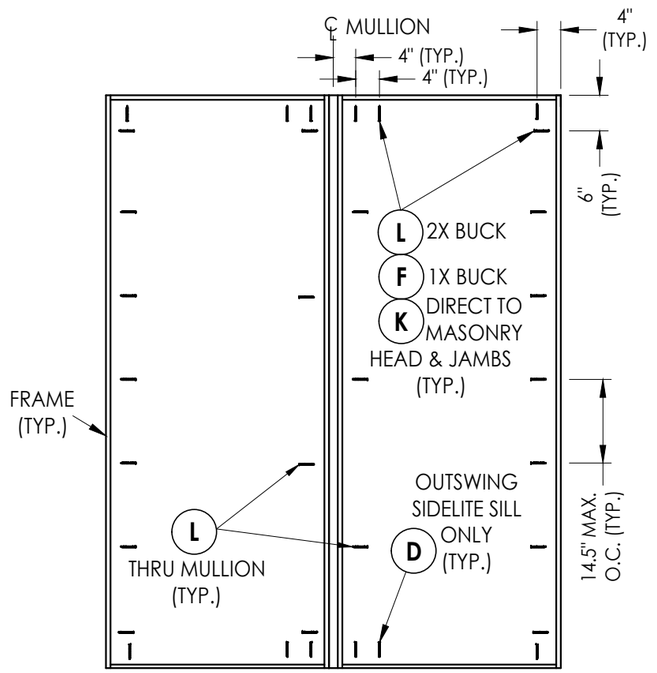


XO/OX

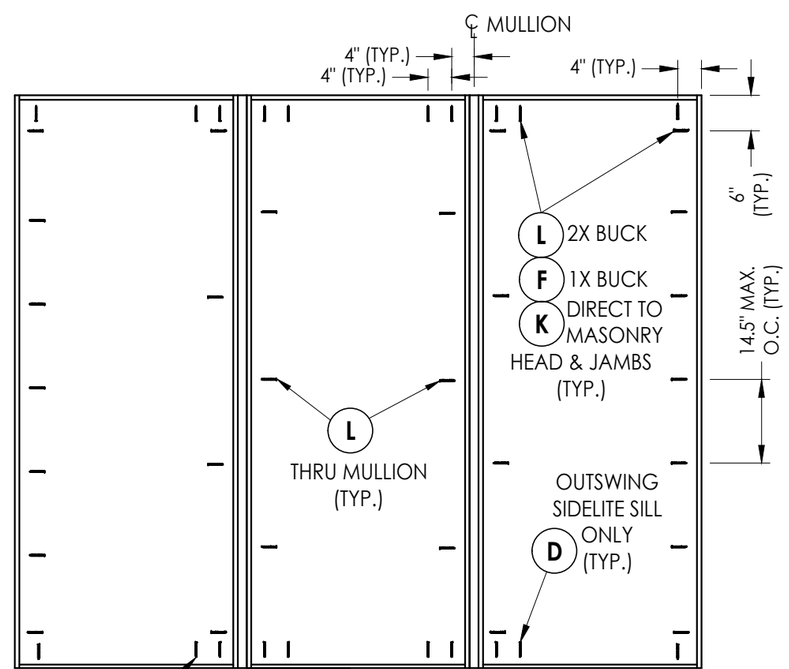


OXO

NOTE:
SEE SEPARATE SIDE-HINGED DOOR PRODUCT APPROVAL FOR DOOR THRESHOLD CONNECTIONS (TYP.).

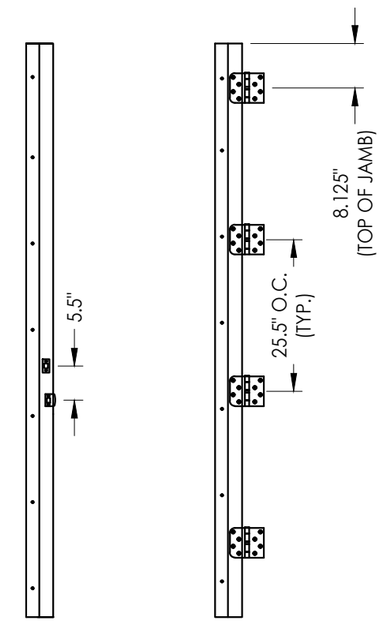


**STRIKE JAMB** **HINGE JAMB**

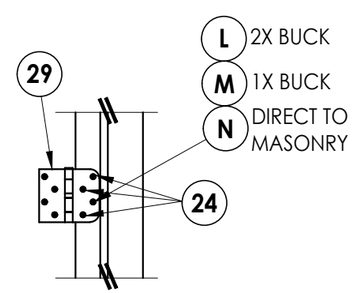


**HINGE DETAIL**

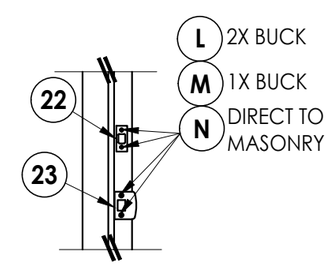


**LATCH & DEADBOLT DETAIL**

Documents Prepared By:
Lyndon F. Schmidt
P.E. No. 43409
RW BUILDING CONSULTANTS, INC.
P.O. Box 230, Valrico, FL 33595
Phone No.: 813.659.9197
FBPE Registry No. 9813

PRODUCT: THERMA-TRU COMPONENTS

PART OR ASSEMBLY: FRAME ANCHORING

| NO. | DATE | REVISIONS | BY |
|---|---|---|---|
| 1 | 7/03/26 | UPDATE TO 9TH ED. (2026) FBC | LFS |

DATE: 2/10/25
SCALE: N.T.S.
DWG. BY: LFS
CHK. BY: RW
DRAWING NO.: FL-47296.2
SHEET 6 OF 7

© 2025 R.W. Building Consultants Inc.

Z:\2023 FBC Drawings\Therma-Tru\FL-47296 R1\FL-47296.2.dwg

| BILL OF MATERIALS | | |
|---|---|---|
| ITEM # | DESCRIPTION | MATERIAL |
| A | 1X BUCK (G >= 0.42) | WOOD |
| B | 2X BUCK (G >= 0.42) | WOOD |
| C | 1/4" MAX. SHIM SPACE | - |
| D | 1/4" X 2-3/4" PFH DeWALT OR ITW CONCRETE SCREW | STEEL |
| E | MASONRY - 3,000 PSI MIN. CONCRETE CONFORMING TO ACI 301 OR HOLLOW BLOCK CONFORMING TO ASTM C90 | CONCRETE |
| F | 1/4" X 3-3/4" PFH DeWALT OR ITW CONCRETE SCREW | STEEL |
| L | #10 X 2-1/2" PFH WOOD SCREW (1.15" MIN. EMBEDMENT) | STEEL |
| K | 1/4" X 3-1/4" PFH DeWALT OR ITW CONCRETE SCREW | STEEL |
| M | 3/16" X 3-1/4" PFH ITW CONCRETE SCREW | STEEL |
| N | 3/16" X 2-3/4" PFH TW CONCRETE SCREW | STEEL |
| X | 2X REINFORCEMENT (G >= 0.55) | WOOD |
| 1 | HEAD, SIDE JAMB, & OUTSWING SIDELITE SILL | COMPOSITE |
| 7 | WEATHERSTRIP | FOAM |
| 22 | DEADBOLT STRIKE PLATE | STEEL |
| 23 | LATCH STRIKE PLATE | STEEL |
| 24 | #10 X 3/4" PFH SMS | STEEL |
| 29 | 4" X 4" HINGE | STEEL |
| 40 | DOOR PANEL | - |
| 50 | SIDELITE PANEL | - |

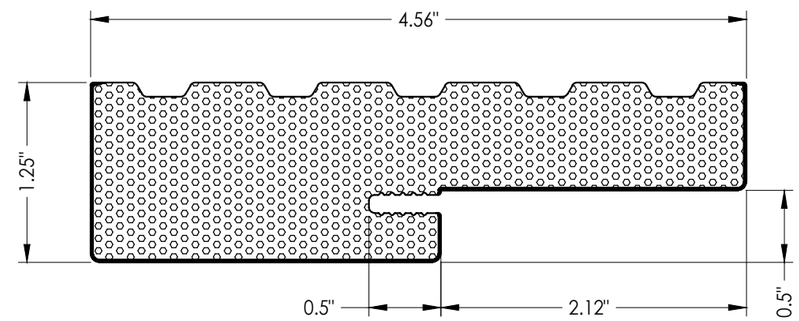


1 **HEAD, SIDE JAMB, & OUTSWING SIDELITE SILL**

CORROSION RESISTANCE - SALTWATER ENVIRONMENTS
Fasteners & connectors in areas within 3000 ft (914 m) of a saltwater coastline shall comply with FBC Sections 1711.1 or R332.1.

*CONCRETE ANCHOR NOTES:*

1. *Concrete anchor locations at the corners may be adjusted to maintain the min. edge distance to mortar joints.*
2. *Concrete anchor locations noted as "MAX. ON CENTER" must be adjusted to maintain the min. edge distance to mortar joints, additional concrete anchors may be required to ensure the "MAX. ON CENTER" dimension are not exceeded.*
3. *Concrete anchor table:*

| ANCHOR TYPE | ANCHOR SIZE | MIN. EMBEDMENT | MIN. CLEARANCE TO MASONRY EDGE | MIN. CLEARANCE TO ADJACENT ANCHOR |
|---|---|---|---|---|
| ITW TAPCON® | 3/16" | 1-1/4" | 3" | 1-1/2" |
| ITW TAPCON® | 1/4" | 1-1/4" | 2" | 4" |
| DeWALT ULTRACON® | 1/4" | 1-1/4" | 1" | 4" |

*WOOD SCREW INSTALLATION NOTES:*

1. *Maintain a minimum 5/8" edge distance, 1" end distance, & 1" o.c. spacing of wood screws to prevent the splitting of wood.*


Documents Prepared By:
Lyndon F. Schmidt
P.E. No. 43409
RW BUILDING CONSULTANTS, INC.
P.O. Box 230, Valrico, FL 33595
Phone No.: 813.659.9197
FBPE Registry No. 9813


PRODUCT: THERMA-TRU COMPONENTS

PART OR ASSEMBLY: BILL OF MATERIALS & COMPONENTS

REVISIONS

| NO. | DATE | | BY |
|---|---|---|---|
| 1 | 7/03/26 | UPDATE TO 9TH ED. (2026) FBC | LFS |

DATE: 2/10/25
SCALE: N.T.S.
DWG. BY: LFS
CHK. BY: RW
DRAWING NO.: FL-47296.2
SHEET 7 OF 7

© 2025 R.W. BUILDING CONSULTANTS INC.

Z:\2023 FBC Drawings\Therma-Tru\FL-47296 R1\FL-47296.2.dwg